Edge AI Vision Accessories

KP73B780A-M4008

USB Depth Vision Camera Module — Datasheet



info@kneron.us

Kneron, Inc.

Address: 10052 Mesa Ridge Court, #202, San Diego, California 92121, USA

Website: https://www.kneron.com

Contact: info@kneron.us

1. Introduction

The KP73B780A-M4008 is a compact USB depth vision module featuring dual OmniVision 1/4" color 1MP CMOS sensors (OV9782), with OmniPixel® 3-GS technology. The module is built around the Kneron KL730 edge-AI processor, and integrates a gyroscope and an 850nm VCSEL illuminator, making it well suited for robotics, smart devices, and augmented reality applications.

2. Specifications

Frame Rate	30 fps @ 1280 × 720
Output Format	I420
Focusing Range	20.1 cm ~ Infinity
Baseline	50 mm
Depth Range	TBD
Depth Accuracy	TBD
Core Processor	Kneron KL730
AI Performance	Up to 3.6 eTOPS (INT8) / 7.2 eTOPS (INT4)
CPU	Arm® Cortex®-A55 Quad-Core, Operating Frequency: 1.1 GHz (MAX.)
Memory	32-bit LPDDR4/x SDRAM
Storage	Up to 4 Gb (512 MB) SPI NAND Flash
Sensor	OmniVision 1/4" color 1MP CMOS sensor OV9782
QTY of Sensor	2
Optical Format	1/4"
Pixel Size	3 µm x 3 µm
Resolution	1296 (H) × 816 (V) (Active pixel)
Color / Mono	Color
IR Illuminator	Included
GYRO	Included
Interface	USB Type-C
Power Supply Range	+5 VDC power supply from USB port
Power Consumption	TBD
Operating Temp	TBD
Storage Temp	TBD

info @ kneron.us

Weight	~57 g

3. Applications

- Robotics
- Smart devices
- Augmented Reality

4. Lens Specifications

Effective Focal Length	2.105 mm
Aperture, F/#	2.2 ± 5%
Field of View (FOV) - diagonal	95°
Field of View (FOV) - horizontal	85.2°
Field of View (FOV) - vertical	59.5°
IR Filter	850nm Dual band pass filter
TV Distortion	< -1.5%

info @ kneron.us

5. IR Illuminator Specifications

Wavelength	850 nm
Field of Illumination (FOI)	87° (H) × 67° (V)

NOTE:

- Avoid hitting VCSEL when camera assembly and operating.
- Keep wide clear upon VCSEL when camera operating.

6. Laser Projector Safety and Certificates

Safety	TBD
Certificates	TBD

7. Laser Projector Maintenance

- Perform maintenance after a period of use, such as cleaning dust.
- Return to Kneron for repair if the VCSEL is not operating normally.

info @ kneron.us

8. Dimensions

DIMENSIONS

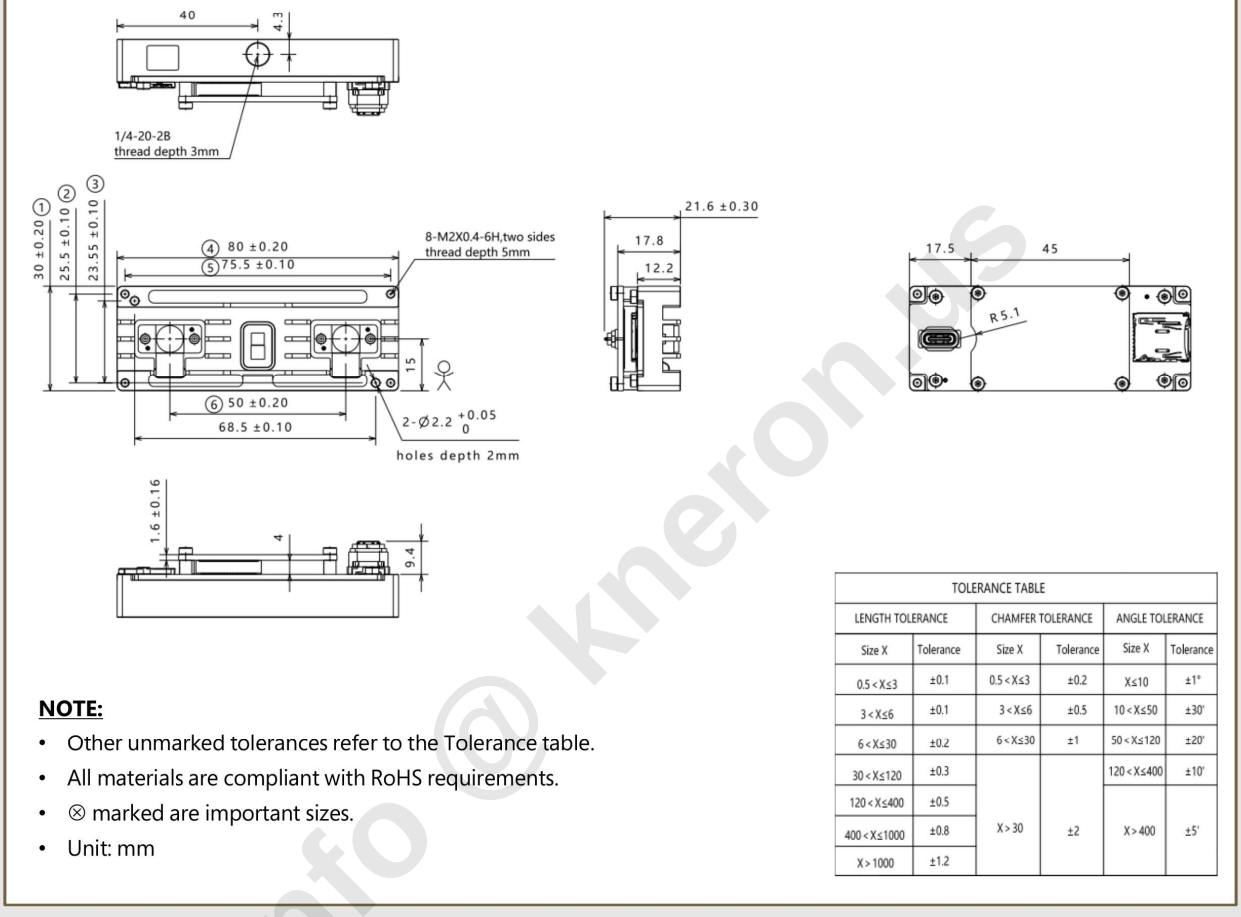

NOTE:

- Other unmarked tolerances refer to the Tolerance table.
- All materials are compliant with RoHS requirements.
- ⊗ marked are important sizes.
- Unit: mm

TOLERANCE TABLE					
LENGTH TOLERANCE		CHAMFER TOLERANCE		ANGLE TOLERANCE	
Size X	Tolerance	Size X	Tolerance	Size X	Tolerance
0.5 < X≤3	±0.1	0.5 < X≤3	±0.2	X≤10	±1°
3 < X≤6	±0.1	3 < X≤6	±0.5	10 < X≤50	±30'
6 < X≤30	±0.2	6 < X≤30	±1	50 < X≤120	±20'
30 < X≤120	±0.3	X > 30	±2	120 < X≤400	±10'
120 < X≤400	±0.5			X > 400	±5'
400 < X≤1000	±0.8				
X > 1000	±1.2				

info @ kneron.us

Figure 1 Mechanical Dimensions (unit: mm)

9. System Block Diagram

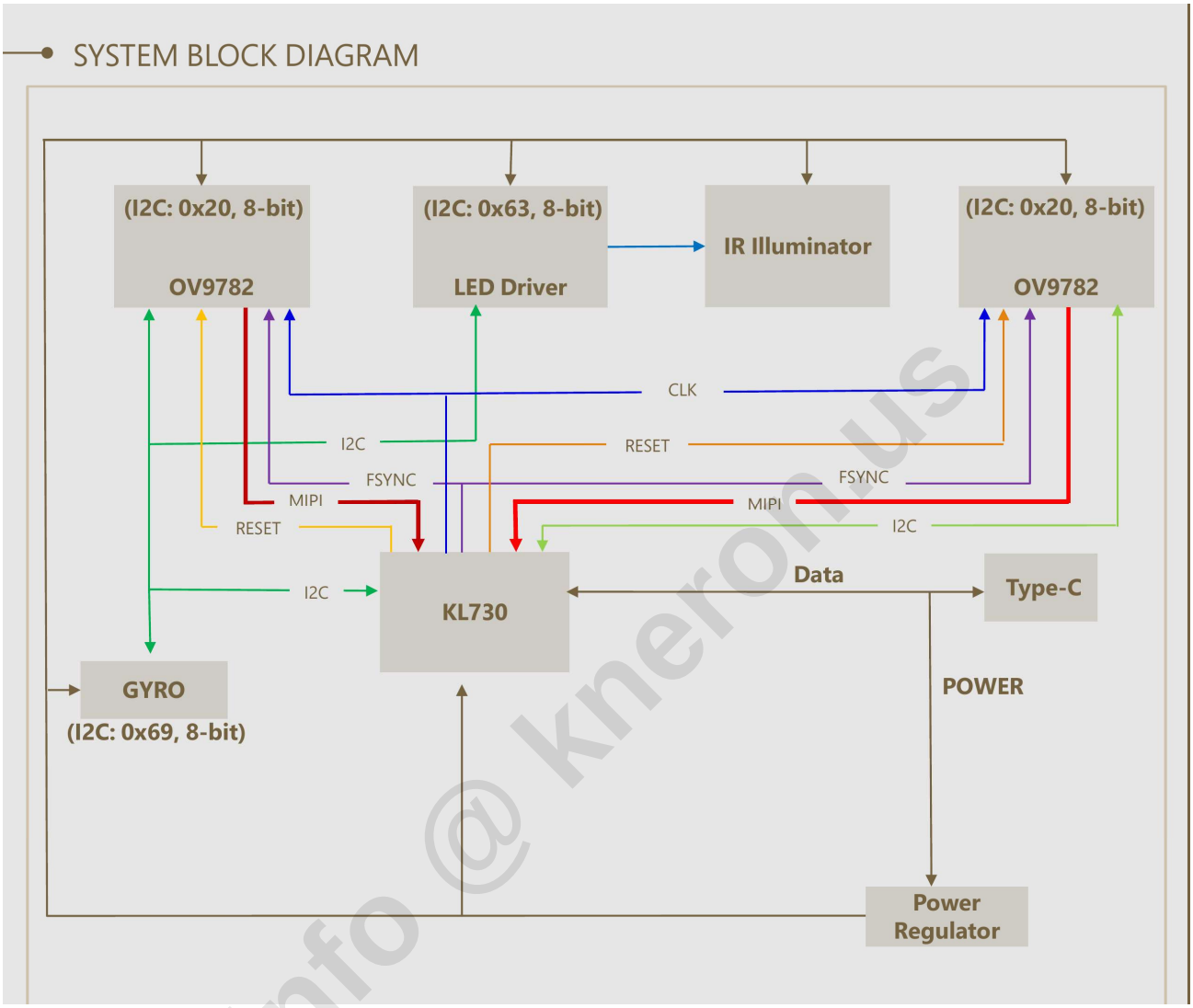

Figure 2 System Block Diagram

info @ kneron.us

10. Revision History

Revision	Description	Release Date
0.1	Initial draft	28 Jul 2026

Kneron, Inc.

Address: 10052 Mesa Ridge Court, #202, San Diego, California 92121, USA

Website: https://www.kneron.com

Contact: info@kneron.us

info @ kneron.us

info @ kneron.us